Revision:	Changes:	Date:
1.0	Initial Case, PCN: RVD002-107	2026.11.18

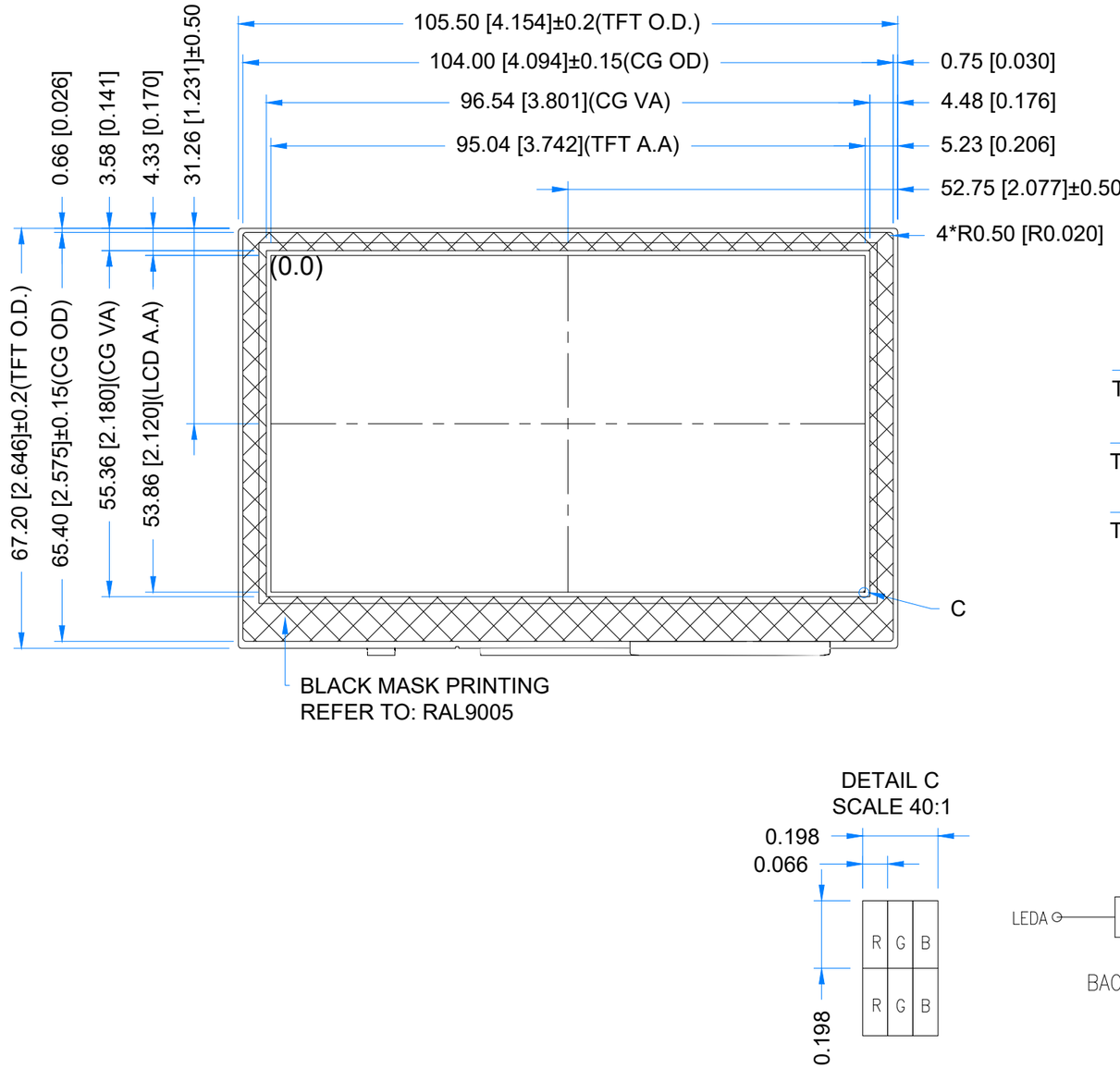

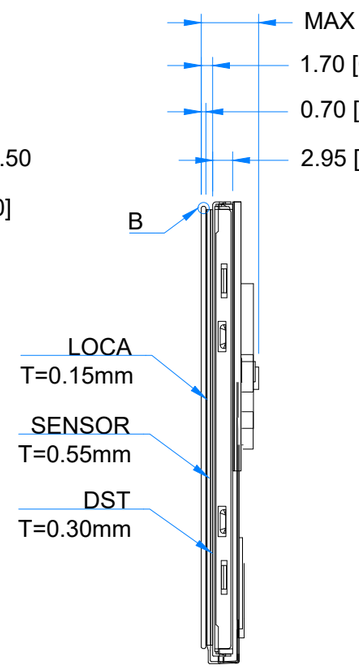

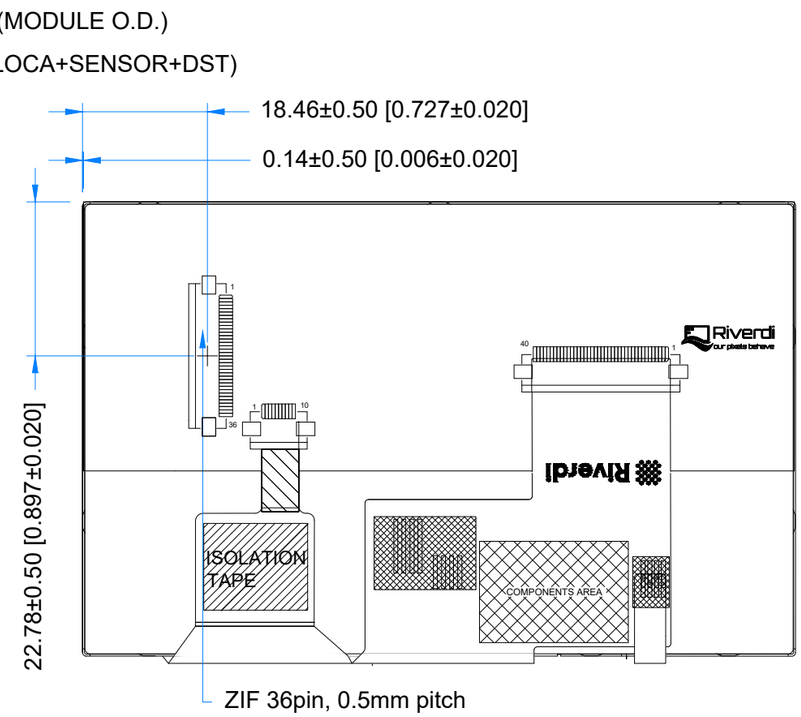

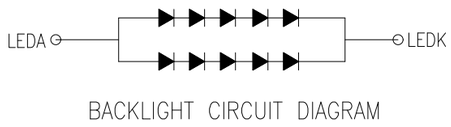

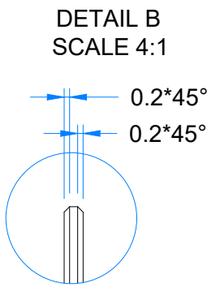

PINOUT ON THE 2ND PAGE

TFT NOTES:
1. DISPLAY TYPE: TFT, TRANSMISSIVE, NORMALLY WHITE
2. RESOLUTION: 480 x 272
3. VIEWING ANGLE: 12 O'CLOCK
4. CONTROLLER IC: SSD1963QL9
5. OPERATION VOLTAGE: VDD=3,3V (TYP.)

TP NOTES:
1. TP STRUCTURE: G+G
2. CG THICKNESS: 0.70mm
3. DRIVER IC: FT5446U
4. SURFACE HARDNESS: 7H
5. INTERFACE: I2C

GENERAL NOTES:
1. SURFACE LUMINANCE: 500cd/m^2
2. OPERATING TEMPERATURE: -20°C ~ 70°C
3. STORAGE TEMPERATURE: -30°C ~ 80°C
4. WITHOUT INDIVIDUAL TOLERANCE: ±0.3mm
5. RoHS COMPLIANT

PN: RVT4.3A480272CNWC36 V4				Riverdi
SN:				
DRAWN:	M.Stabinski	2026.11.18	1:0.91	
CHECKED:	M.Wierzbowski	2026.11.18	[mm]	
APPR:	M.Wierzbowski	2026.11.18	ISO A3	P. 1 of 1

36PIN CONNECTOR			
Pin No.	Desc.	Pin No.	Desc.
1	GND	19	D12
2	VDD	20	D13
3	BL_E	21	D14
4	D/C	22	D15
5	WR	23	NC
6	RD	24	TP_INT
7	D0	25	CS
8	D1	26	RESET
9	D2	27	DISP ON
10	D3	28	NC
11	D4	29	TP_SCL
12	D5	30	TP_SDA
13	D6	31	TP_RST
14	D7	32	NC
15	D8	33	BLED-
16	D9	34	VLED-
17	D10	35	VLED+
18	D11	36	VLED+